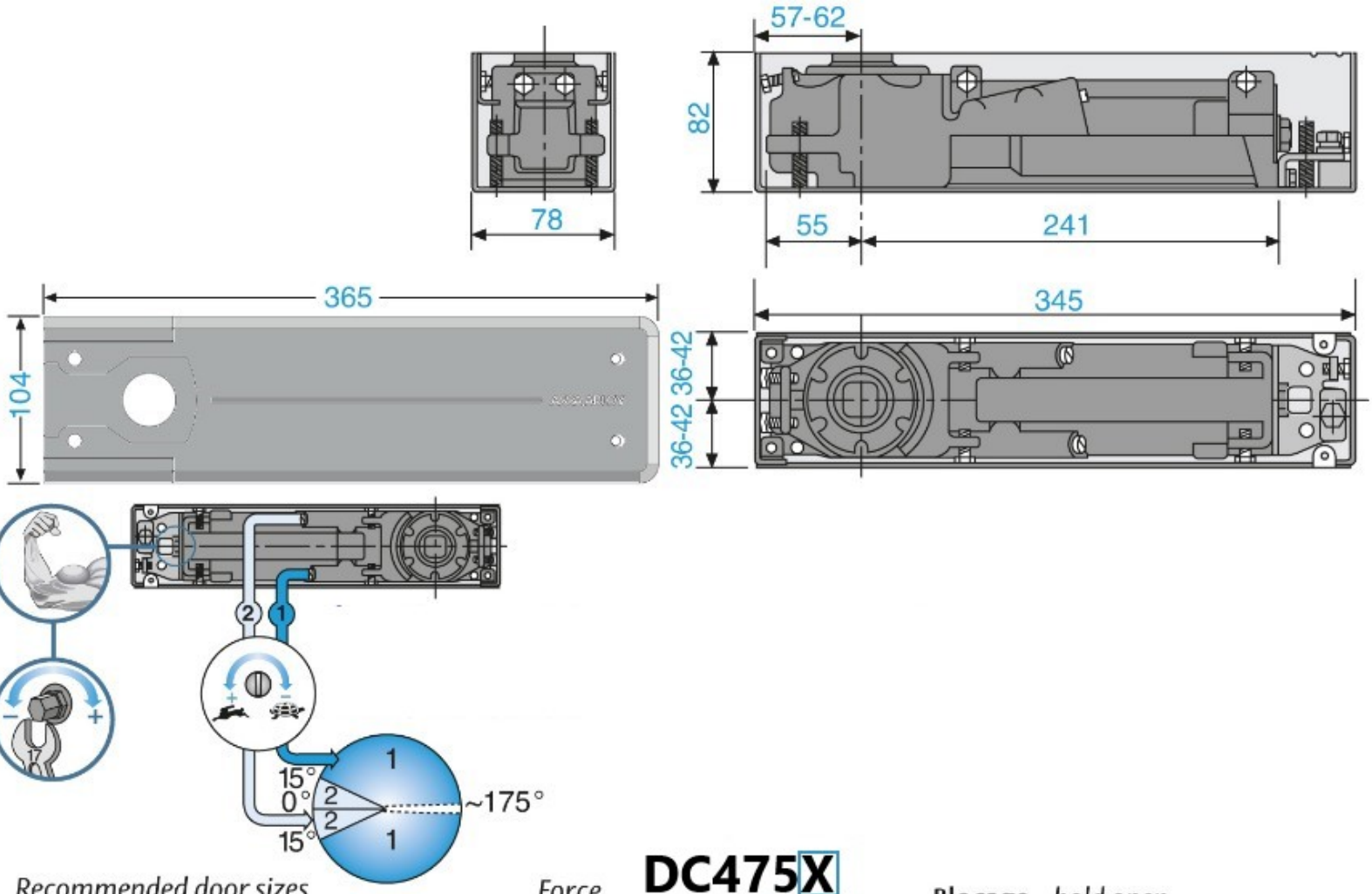

DC475X

Recommended door sizes — *Force*

Min. power	3 = 24 Nm	min.	850 x 2300	300 kg
Max. power	6 = 60 Nm	max.	1400 x 2500	300 kg
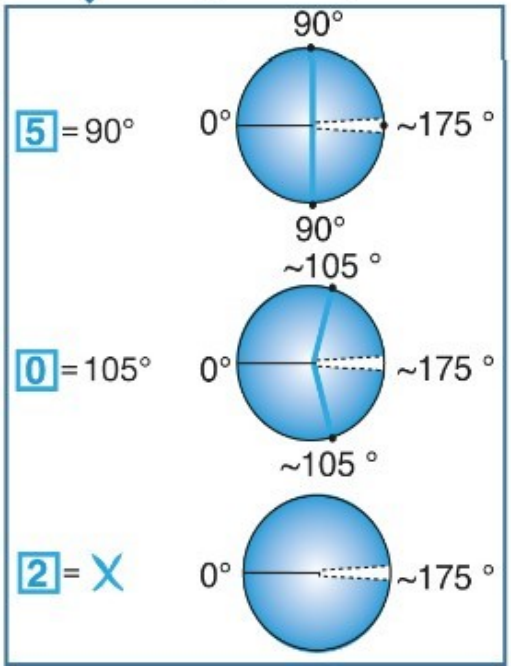
Blocage *hold open*